An RF-EH Employing Controlled-Impedance Matching for Ultra-Low Voltage Batteryless Devices

Tailize C. De-Oliveira
Federal University of Pampa
Alegrete, Brazil
tailizeoliveira.aluno@unipampa.edu.br

Raul P. de Oliveira
Federal University of Pampa
Alegrete, Brazil
rauloliveira.aluno@unipampa.edu.br

Alessandro G. Girardi
Federal University of Pampa
Alegrete, Brazil
alessandrogirardi@unipampa.edu.br

Paulo César C. de Aguirre
Federal University of Pampa
Alegrete, Brazil
pauloaguirre@unipampa.edu.br

Lucas Compassi-Severo
Federal University of Pampa
Alegrete, Brazil
lucassevero@unipampa.edu.br

2023 IEEE 14th Latin America Symposium on Circuits and Systems (LASCAS) | 978-1-6654-5705-7/23/$31.00 ©2023 IEEE | DOI: 10.1109/LASCAS56464.2023.10108099

***Abstract*—Harvesting energy from the existing RF signals present in the environment is a key strategy to power ultra-low voltage (ULV) devices. Such harvesters should present high power conversion efficiency and it is directly affected by the antenna-harvester impedance matching. This paper introduces an RF-EH system with an adapted and digitally-controlled impedance matching approach for batteryless devices. The proposed circuit is designed on a 180-nm CMOS process and is capable of generating a stable supply voltage of 0.4-V from a frequency of 915 MHz while achieving a sensitivity of -19.16-dBm and 66% power efficiency.**

***Keywords*—ultra-low voltage, impedance matching, RF energy harvesting, batteryless devices.**

I. Introduction

The evolution of technology integration and the interest in more compact and longer lifespan devices has motivated the development of battery-less low-power solutions. To achieve these characteristics, new circuit topologies and energy harvesting strategies should be considered. From the circuit point of view, the use of Ultra-Low Voltage (ULV) operation has shown to be a promising strategy to obtain reduced power consumption in both the analog and digital domains [1,2]. On the other hand, due to a large amount of radio frequency (RF) communications used today, RF energy harvesting (RF-EH) becomes a viable alternative for low-power applications, such as wearable electronic devices, wireless sensors and biomedical implants [3,4].

A typical RF-EH system is shown in Fig. 1. It consists of a receiving antenna, an input impedance matching network (IMN), a rectifier, a filtering capacitor and the load (R_L). The IMN circuit is used to convert the rectifiers input impedance (Z_{RECT}) to the characteristic impedance of the antenna (Z_0) in order to achieve the maximum power transfer (MPT) from the antenna to the load.

This study was financed in part by CAPES Brazilian research agency and FAPERGS Brazilian research agency (Project 22/2551-0000841-0).

In RF-DC conversion circuits, the IMN design technique differs from conventional small-signal RF circuits since there is a large input signal and a lack of DC bias. This situation imposes the rectifier circuit to operate in different operating regions within the same input cycle, causing the Z_{RECT} to vary with the received power and R_L. Thus, the variation of the input impedance and its mismatch with the antenna impedance generates an attenuation in the overall power conversion efficiency (PCE) [3]. To compensate for this, the IMN should be designed as an adaptive network to allow the MPT at any operation condition [5].

However, in some specific case scenarios, like the ULV low-power battery-less devices, the MPT should provide only the amount of power demanded by the device, i.e., the MPT is demanded only for lower input power levels since at higher power levels the excess energy is not stored by the device.

In this scenario, this work introduces an RF-EH topology using an adaptive IMN that can be used to obtain the MPT at lower power levels and, at the same time, works as a voltage regulator at higher input power levels. The proposed system is designed in a CMOS 180 nm technology to harvest energy from a 915 MHz RF signal and to provide a regulated DC output voltage of 0.4 V for low-power loads.

This paper is organized as follows: Section II presents the rectifier and the adaptive IMN designs; Section III presents the proposed feedback controlling system; Section IV shows the simulation results; finally, Section IV concludes this work.

II. RF Rectifier and Controlled-Impedance Matching Strategy

This section addresses the design of the RF rectifier and controlled-impedance matching circuit illustrated in Fig. 2. The following subsections present the in-depth design details.

A. Rectifier Design

The rectifier is implemented using the conventional cross-coupled single-stage topology used by [6]. It is composed of two NMOS transistors (M1 and M2) and two PMOS

Authorized licensed use limited to: Universidade Federal dos Pampas (UNIPAMPA). Downloaded on April 18,2026 at 22:46:46 UTC from IEEE Xplore. Restrictions apply.

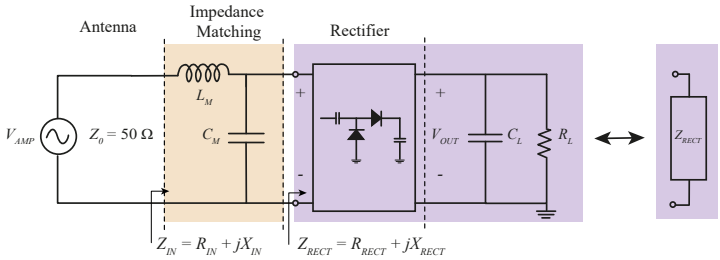

Fig. 1: Typical RF-EH circuit representation.

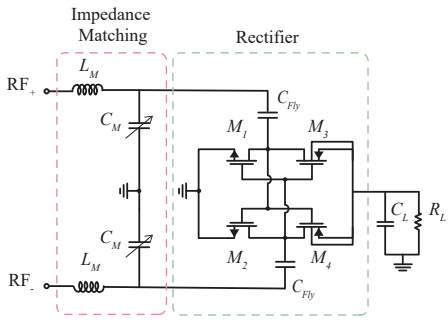

Fig. 2: Schematics of the RF-DC Converter.

transistors (M3 and M4) operating as diodes, two flying capacitors (C_{Fly}), a filtering capacitor (C_L) and a resistive load (R_L) to emulate the application load.

The rectifier was designed in a CMOS 180 nm to operate at 915 MHz. It used low-V_T transistors with a minimum channel length (L_p = 250 nm and L_n = 300 nm) to reduce the parasitic capacitance values and to allow the ULV operation. The transistors' channel width (W_p and W_n) and multipliers (M), and the values of the capacitors were sized using an iterative design methodology with the goal of maximizing the output voltage DC level for a fixed input RF voltage signal amplitude level (W_p = 1.3 μm, W_n = 1 μm and M = 18). With this approach, it is possible to improve the sensitivity and the energy conversion efficiency [7].

B. Rectifier Input Impedance

The input impedance of the rectifier (Z_{RECT}) is complex and can be described as (1), in which R_{RECT} is the real part and X_{RECT} is the imaginary part [8].

$$Z_{RECT} = R_{RECT} + jX_{RECT} \tag{1}$$

The harmonic balance analysis (HB) can be employed to obtain the value of the input impedance in steady-state conditions. In this work we have used the HB analysis on Cadence's Virtuoso® software to obtain Z_{RECT} at the operating frequency of 915 MHz. From this analysis, it was possible to represent the load as a possible R-C equivalent circuit.

The obtained values were R_{RECT} = 376.132 Ω and C_{RECT} = 165.56 fF. They are calculated considering an output load of 10 kΩ and an input amplitude level adjusted to obtain 0.4 V at the output.

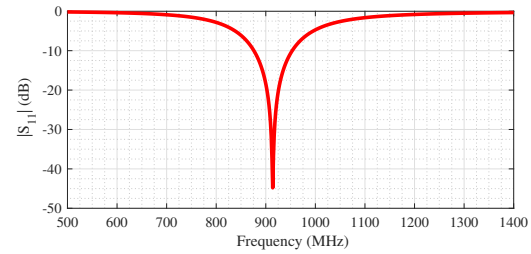

Fig. 3: Input reflection (S_{11}) as a function of the frequency.

C. Input Matching Network

The input matching network (IMN) can be designed considering the obtained Z_{RECT} value and the antenna characteristic impedance (Z_0), here equal to 50 Ω. Using the Smith chart the feasible matching strategies were evaluated and the L-C network shown in Fig. 2 with L_M = 70 nH and C_M = 280 fF was chosen. As the inductor has a higher value to be integrated, in this topology it can be implemented off-chip. Additionally, the parallel capacitor makes easier the implementation of adaptive IMN.

Figure 3 shows the simulated $|S_{11}|$ parameter (reflection coefficient) as a function of the frequency in the range of 500 MHz to 1.4 GHz. As can be seen, it presents a good matching at the operating frequency of 915 MHz.

D. Adaptive Input Matching Network

Based on these initial results of the matching circuit, we move on to the technique of tuning this circuit, thus adopting a system capable of being controlled. For this, we have simulated the effect of the matching capacitor (C_M), for different levels of the input signal amplitude (V_{AMP}) and two different load values. Figure 4 shows the simulation results for R_L = 10 kΩ and R_L = 1 kΩ. As can be seen, it is

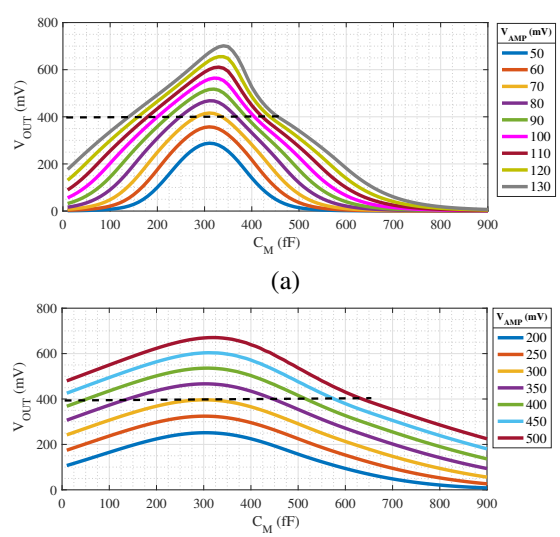

Fig. 4: Variation of the DC output voltage as a function of the matching capacitor: (a) R_L = 10 kΩ; (b) R_L = 1 kΩ.

Authorized licensed use limited to: Universidade Federal dos Pampas (UNIPAMPA). Downloaded on April 18,2026 at 22:46:46 UTC from IEEE Xplore. Restrictions apply.

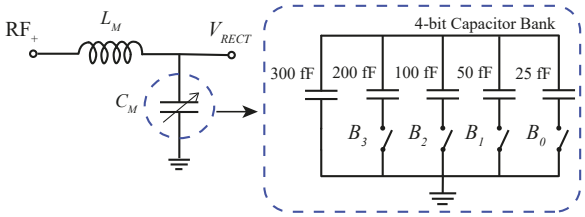

Fig. 5: Four-bits programmable capacitor bank.

possible to control the output voltage by changing C_M for values lower or higher than the designed value. Considering that the implementation of the variable capacitor can generate some parallel parasitic capacitances, the use of a higher-value capacitor is preferred for this implementation.

Additionally, considering different load conditions (*i.e* 1 kΩ and 10 kΩ), it is possible to verify that values of C_M from 300 fF to 650 fF can be employed to keep the output voltage around 0.4 V for input signals with voltage amplitudes ranging from 70 mV up to 500 mV.

In this work, the C_M is implemented using a 4-bits programmable capacitor bank shown in Fig. 5.

III. Closed-Loop Voltage Regulation System

The complete RF-EH system proposed in this work is shown in Fig. 6. The closed-loop system implementation is based on comparing the output DC voltage (V_{OUT}) with two references values and using a digital counter to change the values of the programmable capacitor in order to regulate the V_{OUT} level.

The V_{OUT} level is measured by means of the resistive divider composed of R_1 and R_2, equal to 1 MΩ, that provides to the comparators half of the V_{OUT} voltage level.

Each comparator has a reference voltage equal to $0.2 + \Delta$ and $0.2 - \Delta$, respectively. In which, Δ is the hysteresis control parameter that defines the expected range for the output voltage. In this work, Δ = 10 mV was used to make V_{OUT} in a range of 10% around 0.4 V. The comparators were implemented using pseudo-differential amplifier topology used in [2] to operate with 0.4 V of V_{DD}. Based on the comparators output values $Ctlr_1$ and $Ctrl_2$, the counter should increments, decrements or keep the values of the capacitor control signal, as shown in the comparison logic of Table I.

After comparing the voltage that comes out of the rectifier we move on to the logic block of the control unit. Basically, the control unit consists of a four bits adder and an accumulator (ACC) that manages the four-bit word ($B_0 - B_3$) used to adjust the C_M capacitor value. One of the adder inputs is connected to the $B_0 - B_3$ and the other is a constant value ($E_0 - E_3$), defined by the multiplexer. The constant value can be equal to 1, -1 and 0 (decimal) in order to increment, decrement, or keep the value of $B_0 - B_3$, respectively. The mux selection bits Sel_0 and Sel_1 are obtained with a decoder block. The decoder presets as inputs the outputs of the comparators signals ($Ctlr_1$ and $Ctrl_2$) and the outputs of the zero detection and fifteen detection blocks, which are used to avoid overflow and underflow in the capacitor four-bits word.

TABLE I: Comparison logic

$Vout_{div}$	$Ctlr_1$	$Ctlr_2$	**Action**
< 0.2 + Δ	0	0	Decrements
0.2 + Δ	0	1	Keeps
0.2 - Δ	1	0	Never Happens
> 0.2 - Δ	1	1	Increment

In this work, all the digital circuits were implemented with custom CMOS static gates designed to operate with the V_{DD} of 0.4 V. The logic clock signal and the voltage references are considered external signals in this work.

IV. Simulation Results and Discussion

The complete system was implemented on Cadence's Virtuoso® software considering a CMOS 180 nm process. All the circuits used Low-VT transistors to work with V_{DD} of 0.4 V.

The circuit was simulated at the schematic level in order to validate its operation. For the simulations, a 915 MHz variable amplitude level differential RF input signal is applied to the circuit inputs. It was obtained using two single-ended 50 Ω ports. The voltage reference values were adjusted to 0.42 V and 0.36 V and the external digital clock was defined to 9.15 MHz - 1% of the RF frequency - to present a fast response and to reduce the simulation effort. The input offset of the comparators was analyzed with 1000 runs of Monte Carlo simulations and its standard deviation resulted in 1.18 mV

Figure 7 shows the result of the complete system simulation when the input RF signal presents amplitudes of 70 mV, 140 mV, 210 mV, 280 mV, 350 mV, 420 mV and 490 mV, and an output load of 10 kΩ. It can be seen that the system self-regulates to the desired output voltage. At the lower input level of 70 mV were observed the input power of 24.22 μW, the output power of 17.11 μW and the power of the digital circuit was approximately 1.7 μW. It results in a PCE of approximately 66%.

Fig. 8 shows the simulation results considering that R_L is dynamically changed to the values of 100 kΩ, 50 kΩ, 25 kΩ, 12.5 kΩ and 6.25 kΩ during the simulation. It can be observed that even with the load variation, the system tends to regulate itself and maintain the desired output voltage even with the increase in the power delivered to the load.

Table II shows the comparison of the results obtained in this work with other RF-EH in the literature. The PCE of the proposed circuit is superior when compared to the works that present load regulation capacity, and it is on average when compared to the others. Only this work has the target operation at the ULV range.

V. Conclusion

This work presented the design of a complete RF-EH system capable of controlling the input impedance matching circuit to provide and keep a ULV of 0.4 V at the output. The proposed circuit was designed in a 180-nm CMOS process. Through the entire project and analysis, it is proven that the presented topology is a good candidate to be used when we want to power battery-less devices that are supplied by ULV. This

Authorized licensed use limited to: Universidade Federal dos Pampas (UNIPAMPA). Downloaded on April 18,2026 at 22:46:46 UTC from IEEE Xplore. Restrictions apply.

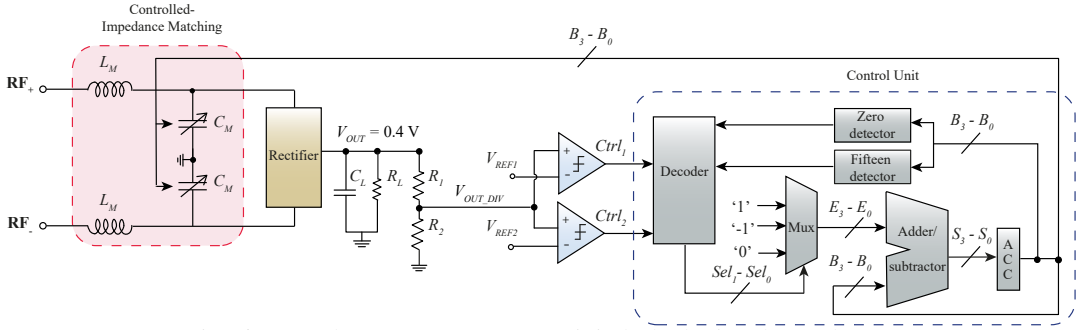

Fig. 6: Complete RF-EH system. Digital clock signal not shown.

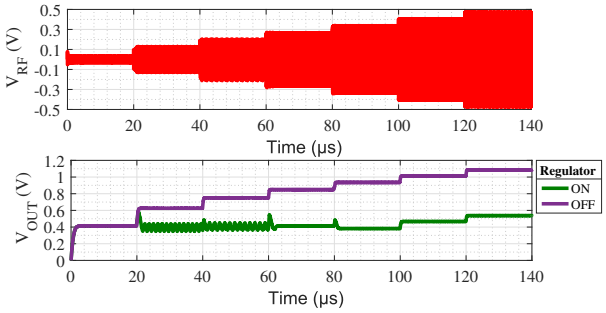

Fig. 7: Simulation results of the proposed ULV RF-EH.

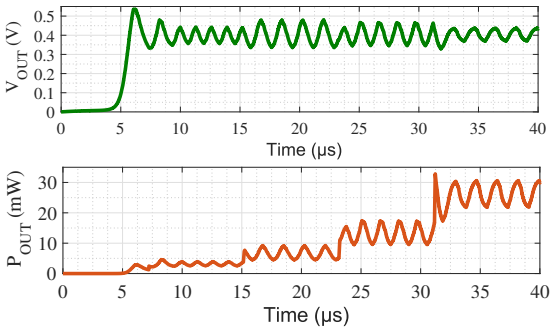

Fig. 8: Results considering load variation.

paper also has proved that it is possible to design an RF-EH that presents good impedance matching at lower input amplitude voltage levels and works as a voltage regulator for higher input voltage levels.

In future work, it is intended to implement a reference voltage circuit, the generation of the digital clock, a cold-start circuit and prototype the proposed ULV RF-EH system. Additionally, the analysis of the parasitic capacitance at the input and at the switches will be performed.

TABLE II: Performance comparison with other works

Specification	This△	[5]*	[9]*	[10]*	[11]*	[12]*
Tech. (nm)	**180**	180	130	180	180	180
Freq. (MHz)	**915**	403.5	900	915	900	900
V_{OUT} (V)	**0.4**	1.8	1.1	0.8-2.2	2	1
Sens. (dBm)	**-19.1**	-24	-18.7	-17.8	-17	-14.8
Peak PCE (%)	**66.0**	40.2	80.3	34.4**	44.1	25
N. of stages	**1**	1	3	2-12	1	1-8
LRC◇	Yes	Yes	No	No	No	Yes

△Schematic-level simulation data; *Measured data; **Includes the antenna efficiency (93%); ◇LRC - Load Regulation Capability.

Acknowledgement

The authors would like to thank to CAPES and FAPERGS (Project 22/2551-0000841-0) for supporting this work.

References

[1] S. Jain, L. Lin, and M. Alioto, "Design-oriented energy models for wide voltage scaling down to the minimum energy point," *IEEE Transactions on Circuits and Systems I: Regular Papers*, vol. 64, no. 12, pp. 3115–3125, 2017.

[2] L. Compassi-Severo and W. Van Noije, "A 0.4-v 10.9- μ w/pole third-order complex bpf for low energy rf receivers," *IEEE Transactions on Circuits and Systems I: Regular Papers*, vol. 66, no. 6, pp. 2017–2026, 2019.

[3] Z. Hameed and K. Moez, "Design of impedance matching circuits for rf energy harvesting systems," *Microelectronics Journal*, vol. 62, pp. 49–56, 2017.

[4] Y. Zhang, F. Zhang, Y. Shakhsheer, J. D. Silver, A. Klinefelter, M. Nagaraju, J. Boley, J. Pandey, A. Shrivastava, E. J. Carlson, A. Wood, B. H. Calhoun, and B. P. Otis, "A batteryless 19 μw mics/ism-band energy harvesting body sensor node soc for exg applications," *IEEE Journal of Solid-State Circuits*, vol. 48, no. 1, pp. 199–213, 2013.

[5] G. C. Martins and W. A. Serdijn, "An rf energy harvesting and power management unit operating over 24 to +15 dbm input range," *IEEE Transactions on Circuits and Systems I: Regular Papers*, vol. 68, no. 3, pp. 1342–1353, 2021.

[6] K. Kotani, A. Sasaki, and T. Ito, "High-efficiency differential-drive cmos rectifier for uhf rfids," *IEEE Journal of Solid-State Circuits*, vol. 44, no. 11, pp. 3011–3018, 2009.

[7] T. C. De-Oliveira and L. Compassi-Severo, "Design of a cross-coupled rectifier for ultra-low voltage rf energy harvesters," in *37º South Symposion of Microeletronics, Brazil*, 2022.

[8] S. García-Moreno, M. A. Gurrola-Navarro, C. A. Bonilla-Barragán, and I. Mejía, "Design method for rf energy harvesting rectifiers," *IEEE Transactions on Circuits and Systems II: Express Briefs*, vol. 67, no. 11, pp. 2727–2731, 2020.

[9] G. Chong, H. Ramiah, J. Yin, J. Rajendran, P.-I. Mak, and R. P. Martins, "A wide-pce-dynamic-range cmos cross-coupled differential-drive rectifier for ambient rf energy harvesting," *IEEE Transactions on Circuits and Systems II: Express Briefs*, vol. 68, no. 6, pp. 1743–1747, 2021.

[10] Z. Zeng, S. Shen, X. Zhong, X. Li, C.-Y. Tsui, A. Bermak, R. Murch, and E. Sánchez-Sinencio, "Design of sub-gigahertz reconfigurable rf energy harvester from 22 to 4 dbm with 99.8*IEEE Journal of Solid-State Circuits*, vol. 54, no. 9, pp. 2601–2613, 2019.

[11] P.-H. Hsieh, C.-H. Chou, and T. Chiang, "An rf energy harvester with 44.1at input available power of -12 dbm," *IEEE Transactions on Circuits and Systems I: Regular Papers*, vol. 62, no. 6, pp. 1528–1537, 2015.

[12] M. A. Abouzied, K. Ravichandran, and E. Sánchez-Sinencio, "A fully integrated reconfigurable self-startup rf energy-harvesting system with storage capability," *IEEE Journal of Solid-State Circuits*, vol. 52, no. 3, pp. 704–719, 2017.

Authorized licensed use limited to: Universidade Federal dos Pampas (UNIPAMPA). Downloaded on April 18,2026 at 22:46:46 UTC from IEEE Xplore. Restrictions apply.